A-C Valve Inc.

FIGURE

76

CAST BODY
KNIFE GATE
VALVE

Solid one piece cast body in corrosion resistant stainless steel.

Compact wafer configuration to Tappi standard face to face.

Designed to handle dense mixtures of stock and slurries. The shearing action of the knife gate cuts through solids and cleans the seat as it closes.

Smooth flow - non-clogging FULL PORT design.

Gate and seat are machined and fitted to provide shutoff in one direction.

Bonnetless, outside screw and yoke, non-rising handwheel, rising stem.

Available in sizes from 2" to 24" diameter.

Meets Tappi standard TIS 405-8 for stainless steel bonnetless, flanged, wafer knife gate valves.

150 PSI design pressure.

Flanges matches ANSI B16.5-150 lbs. standard with all tapped holes, serrated gasket faces.

Factory installed V-Port inserts available for metering or throttling service.

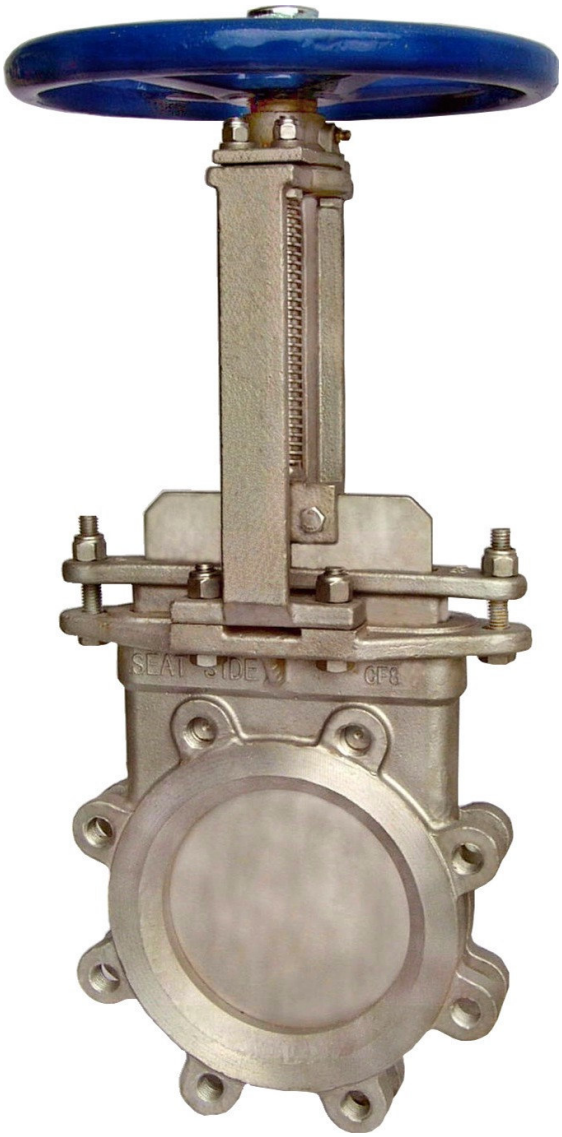

<u>Used in these industries:</u>

Pulp & Paper
Mining
Waste Water
Power
Chemical
Beverage
Food Processing
Industrial

12312 NE Whitaker Way
Portland, OR 97230
Tel: 503-251-2007
800-334-8777
Fax: 503-251-1313
Web: www.a-cvalve.com

A-C Valve Inc.

FIGURE

76

CAST BODY
STAINLESS STEEL
KNIFE GATE VALVE

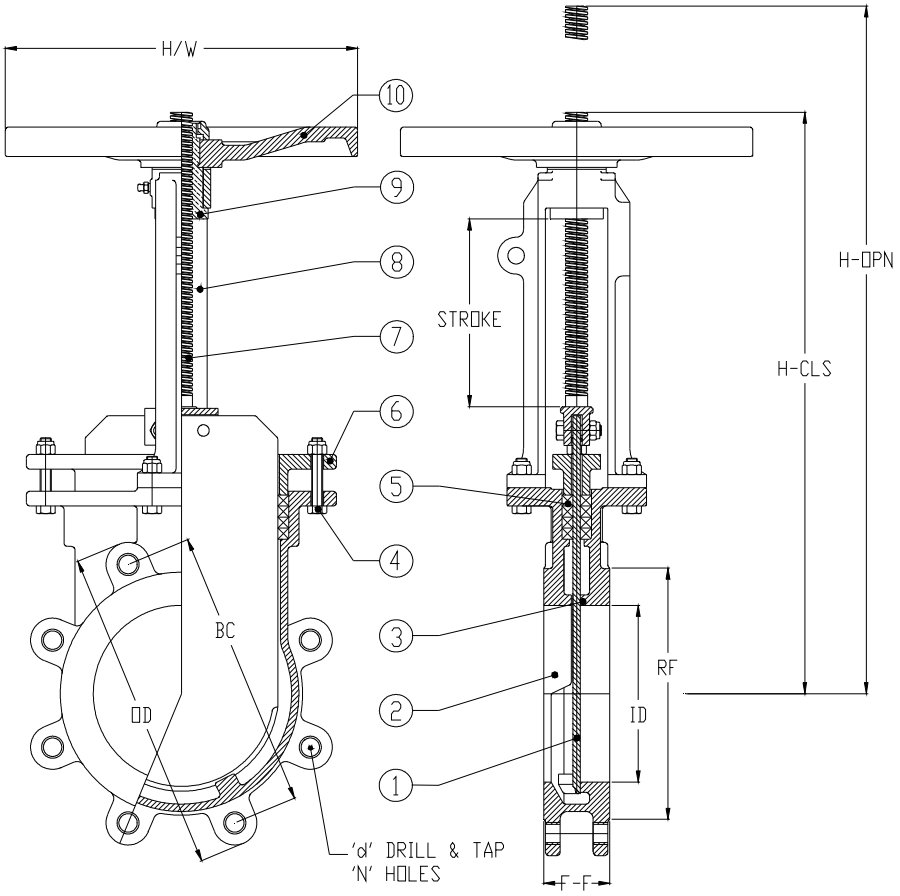

MATERIALS OF CONSTRUCTION

MODEL	**76**
1 GATE	SS
2 BODY	SS
3 SEAT	SS
4 BOLTS	SS
5 PACKING	TLSP*
6 GLAND	SS
7 STEM	SS
8 YOKE	SS
9 STEM NUT	BRASS
10 HANDWHEEL	DI

*TLSP = TFE Lubricated Synthetic Packing

Stocked in 304 and 316 SS. 317 SS Available.

Normally supplied with handwheel for manual operation, but can be modified for lever, chainwheel, bevel gear, electric, hydraulic cylinder or pneumatic cylinder operator.

DIMENSIONS (INCHES) AND WEIGHTS

SIZE		2”	3”	4”	6”	8”	10”	12”	14”	16”	18”	20”	24”
FACE TO FACE	F-F	1-7/8	2	2	2-1/4	2-3/4	2-3/4	3	3	3-1/2	3-1/2	4-1/2	4-1/2
FLANGE OD	OD	6	7-1/2	9	11	13-1/2	16	19	21	23-1/2	25	27-1/2	32
BOLT CIRCLE	BC	4-3/4	6	7-1/2	9-1/2	11-3/4	14-1/4	19	18-3/4	21-1/4	22-3/4	25	29-1/2
INSIDE DIAMETER	ID	2	3	4	6	8	10	12	13-5/8	15-1/2	17-1/2	19-1/2	23-3/8
NUMBER OF HOLES	N	4	4	8	8	8	12M	12	12	16	16	20	20
HOLE D&T SIZE	d	5/8	5/8	5/8	3/4	3/4	7/8	7/8	1	1	1-1/8	1-1/8	1-1/4
C/L TO TOP-CLOSED	H	12-5/8	14-1/2	16-1/2	19-3/4	24-1/4	29-1/2	33-1/8	37-1/2	42-1/2	47	51-3/4	58-1/4
C/L TO TOP-OPEN	H	14-7/8	17-3/4	20-5/8	26	32-3/4	39-5/8	45-1/2	51-1/8	58-3/8	64-1/2	71-1/2	82 1/4
HANDWHEEL DIA	H/W	8	8	8	12	12	15	15	15	20	20	20	30
WEIGHT - LBS.		20	29	38	52	85	120	160	250	300	403	495	666