A-C Valve Inc.

FIGURE

77

CAST BODY
RESILIENT SEAT
KNIFE GATE
VALVE

Solid one piece **cast body** in corrosion resistant **stainless steel**.

Compact wafer configuration to Tappi and **MSS standard face to face.**

Rubber seat provides a **BI-DIRECTIONAL DRIP TIGHT SEAL** across the gate from 0 to 150 PSI.

Resilient seat is **FIELD REPLACEABLE.**

Designed to **handle dense mixtures of stock and slurries**. A variety of resilient seat materials available.

Smooth flow - **non-clogging FULL PORT** design.

Easy conversion from handwheel operator to cylinder, bevel gear or electric motor operator using cast yoke.

Bonnetless, outside screw and yoke, non-rising handwheel, rising stem.

Available in sizes from **2" to 24"** diameter.

Meets Tappi standard TIS 405-8 and **MSS SP 81** for stainless steel bonnetless, flanged, wafer knife gate valves.

150 PSI design pressure.

Flanges matche **ANSI B16.5-150 lbs.** standard with all tapped holes, serrated gasket faces.

TFE lubricated synthetic packing (TLSP) rated for 450º F and a PH range of 3-11 is standard.

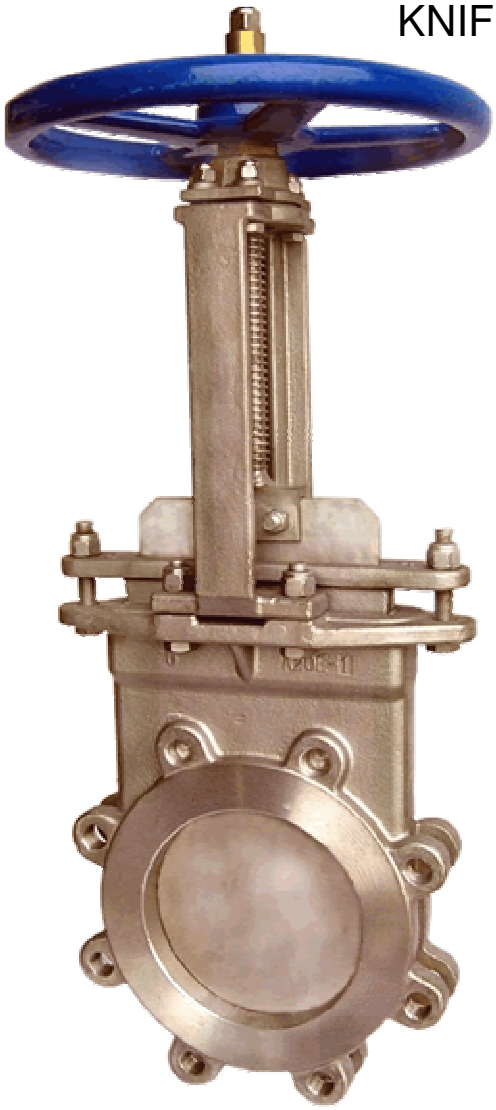

Used in these industries:

Pulp & Paper **Mining**
Waste Water **Power**
Chemical **Beverage**
Food Processing
Industrial

675 Mitchell Ave
Woodland, WA 98674
Tel: 360-225-8003
800-334-8777
Fax: 360-225-8638
Web: www.a-cvalve.com

A-C Valve Inc.

FIGURE

77

CAST BODY RESILIENT SEAT KNIFE GATE VALVE

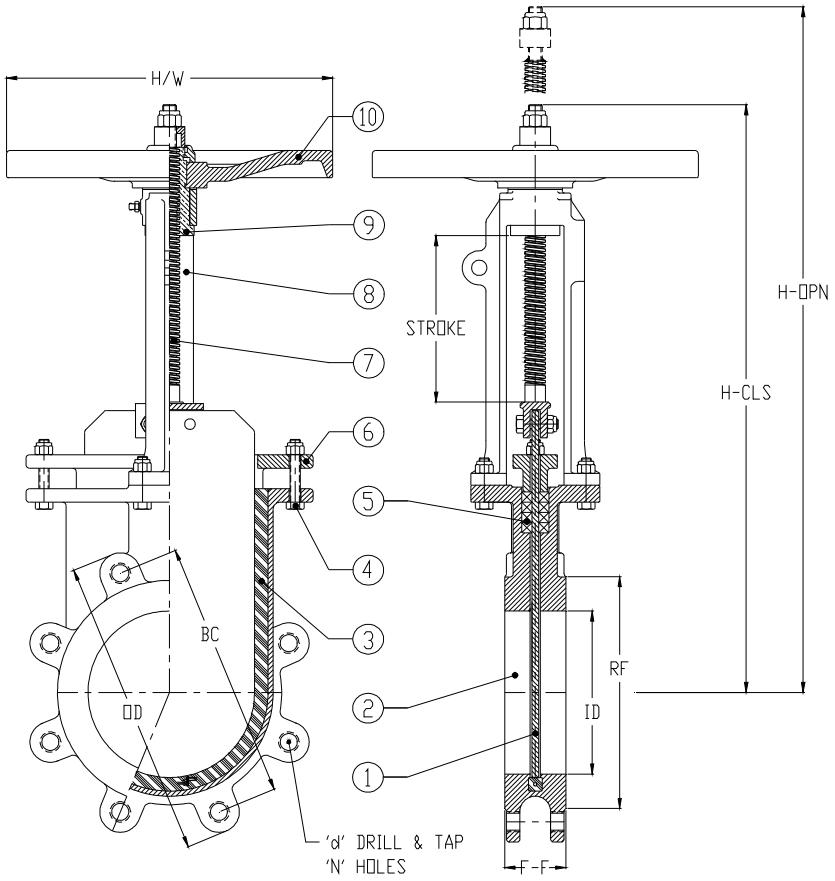

MATERIALS OF CONSTRUCTION

	MODEL	**77**
1	GATE	SS
2	BODY	SS
3	SEAT	Hycar
4	BOLTS	SS
5	PACKING	TLSP*
6	GLAND	SS
7	STEM	SS
8	YOKE	SS
9	STEM NUT	BRASS
10	HANDWHEEL	DI

*TLSP = TFE Lubricated Synthetic Packing

Stocked in 304 and 316 SS. 317 SS Available.

Normally supplied with handwheel for manual operation, but can be modified for lever, chainwheel, bevel gear, electric, hydraulic cylinder or pneumatic cylinder operator.

SEAT MATERIALS AVAILABLE:

HYCAR HYPALON EPDM
VITON TEFLON

DIMENSIONS (INCHES) AND WEIGHTS

SIZE		2”	3”	4”	6”	8”	10”	12”	14”	16”	18”	20”	24”
FACE TO FACE	F-F	1-7/8”	2”	2”	2-1/4”	2-3/4”	2-3/4”	3”	3”	3-1/2”	3-1/2”	4-1/2”	4-1/2”
FLANGE OD	OD	6”	7-1/2”	9”	11”	13-1/2”	16”	19”	21”	23-1/2”	25”	27-1/2”	32”
BOLT CIRCLE	BC	4-1/4”	6”	7-1/2”	9-1/2”	11-3/4”	14-1/4”	17”	18-3/4”	21-1/4”	22-3/4”	25”	29-1/2”
INSIDE DIAMETER	ID	2”	3”	4”	6”	8”	10”	12”	13-5/8”	15-1/2”	17-1/5”	19-1/2”	23-3/8”
NUMBER OF HOLES	N	4	4	8	8	8	12	12	12	16	16	20	20
HOLE D&T SIZE	d	5/8”-11	5/8”-11	5/8”-11	3/4”-10	3/4”-10	7/8”-9	7/8”-9	1”-8	1”-8	1-1/8”-7	1-1/8”-7	1-1/4”-7
C/L TO TOP-CLOSED	**H-CLS**	13-5/8”	16”	17-3/4”	21-5/8”	26-3/4”	32-1/8”	36-3/8”	42”	46-3/4”	52-3/8”	55-3/4”	66-1/2”
C/L TO TOP-OPEN	**H-OPN**	16”	19-3/4”	21-5/8”	27-3/4”	34-3/4”	42-3/4”	48-5/8”	55-1/4”	63-1/8”	70-1/2”	76-3/4”	85-3/4”
HANDWHEEL DIA.	H/W	8”	8”	8”	12”	12”	15”	15”	15”	20”	20”	20”	30”
WEIGHT - LBS.		20	29	38	52	85	120	160	212	300	350	480	600