A-C Valve Inc.

FIGURE

63

HIGH PERFORMANCE POLYMER LINED KNIFE GATE VALVE

Heavy Duty fabricated carbon steel or stainless steel body, yoke and packing gland.

UHMW, PTFE or Polypropylene liner and seat provide **bi-directional tight shutoff.**

Three-piece field replaceable liner/seat.

Available in standard pressure ratings of **150 psi or 300 psi**. Higher pressure ratings and custom designs also available.

ANSI B16.5 class 150 or 300 flange bolting.

MSS-SP81 face-to-face and flange dimensions.

Stainless steel gate and stem for corrosion resistance and durability. Special Alloys, coatings and surface hardening also available.

Superior packing arrangement provides Improved sealing performance in **high cycle applications.**

Full port inside diameter in all sizes. Custom port sizes and designs available.

Minimum 4 bolt packing gland design to assure proper gland alignment in all sizes.

Available with manual handwheel, chainwheel, bevel gear, pneumatic/hydraulic cylinder, or electric motor actuator.

Recommended for applications requiring superior corrosion and/or erosion resistance, heavy slurry and high cycle applications.

Used in these industries:

Mining **Waste Water**
Power **Chemical**
Pulp & paper

675 Mitchell Ave.
Woodland, WA 98674
Tel: 360-225-8003
800-334-8777
Fax: 360-225-8638
Web: www.a-cvalve.com

A-C Valve Inc.

A-C Valve Inc.

FIGURE

63

HIGH PERFORMANCE POLYMER LINED KNIFE GATE VALVE

Materials of Construction

1 Body	CS/304 SS/316 SS
2 Gate	304 SS/316 SS/Alloy
3 Ret. Rings	304 SS/316 SS/Alloy
4 Liner/Seat	UHMWPE/PTFE/PP
5 Packing	TLSP*/PTFE
6 Packing Gland	CS/304 SS/316 SS
7 Stem	304 SS
8 Yoke	CS/304 SS

*TLSP = TFE Lubricated Synthetic Packing

Normally supplied with handwheel for manual operation, but can be modified for lever, chainwheel, bevel gear, electric, hydraulic cylinder or pneumatic cylinder operator.

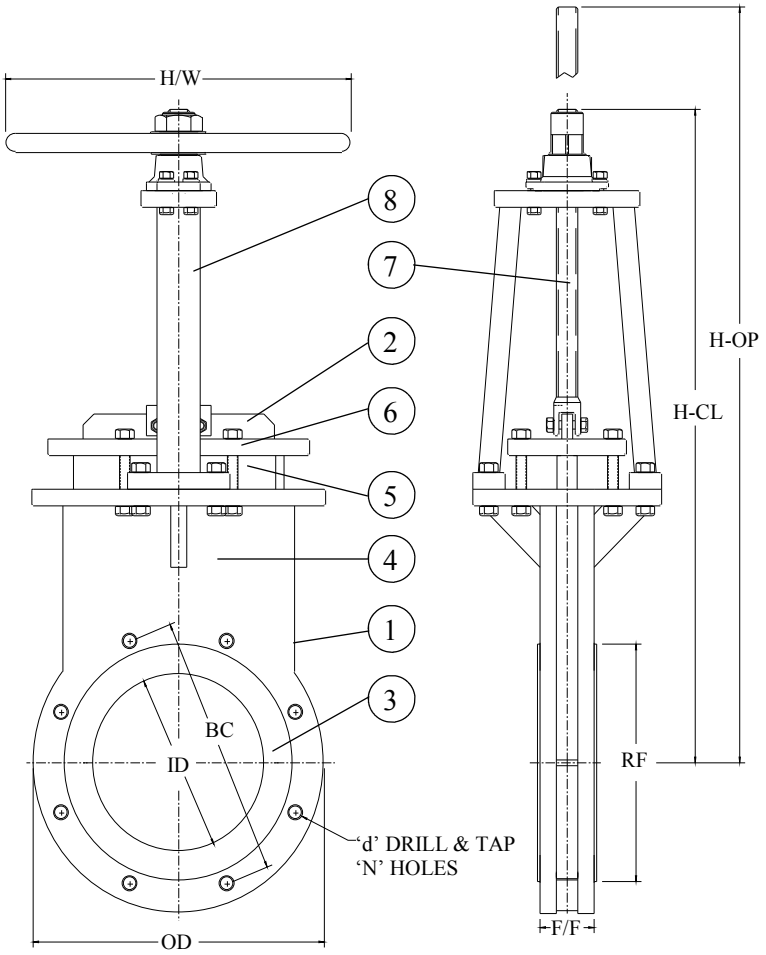

DIMENSIONS (INCHES) AND WEIGHTS

	SIZE	3"	4"	6"	8"	10"	12"	14"	16"	18"	20"	24"
PORT ID	ID	3"	4"	6"	8"	10"	12"	14"	16"	18"	20"	24"
FACE-TO-FACE	F/F	2"	2"	2-1/4"	2-3/4"	2-3/4"	3"	3"	3-1/2"	3-1/2"	4-1/2"	4-1/2"
BOLT CIRCLE	BC	6"	7-1/2"	9-1/2"	11-3/4"	14-1/4"	17"	18-3/4"	21-1/4"	22-3/4"	25"	29-1/2"
RAISED FACE	RF	5"	6-3/16"	8-1/2"	10-5/8"	12-3/4"	15"	16-1/4"	18-1/2"	21"	23"	27-1/4"
FLANGE OD	OD	7-1/2"	9"	11"	13-1/2"	16"	19"	21"	23-1/2"	25"	27-1/2"	32"
# BOLT HOLES	N	4	8	8	8	12	12	12	16	16	20	20
DRILL & TAP	d	5/8"-11	5/8"-11	3/4"-12	3/4"-10	7/8"-9	7/8"-9	1"-8	1"-8	1-1/8"-7	1-1/8"-7	1-1/4"-7
HANDWHEEL OD	H/W	8"	8"	12"	12"	16"	16"	20"	20"	20"	20"	20"
C/L TO TOP - CLS	H-CL	21"	22"	29"	32"	35"	42"	46"	51"	58"	61"	70"
C/L TO TOP - OPN	H-OP	23"	26"	34"	40"	46"	54"	59"	67"	75"	81"	94"
WEIGHT - LBS.		48	60	89	150	210	309	420	554	680	950	1200