A-C Valve Inc.

FIGURE

92

FABRICATED SLIDE GATE VALVE

Fabricated stainless steel lined body ideally suited for dense or abrasive media both wet and dry

Stainless steel gate, seat and raised face

Body cavity, seat configuration and beveled gate designed to provide shut-off capability in thick media such as pulp stock, slurries or with solid media such as pellets or powders.

Smooth flow non-clogging FULL PORT design.

Valve seat face is protected by gate in both open and closed positions.

Full range of operators available including air cylinder, bevel gear or electric actuators.

Precision machined stainless steel gate for superior seating capability.

Designed and tested to MSS-SP-81 dimensions and specifications.

Can be manufactured in special materials such as ALLOY 20, HASTELLOY, TITANIUM and MONEL for severe services.

Flanges matches ANSI B16.5-150 lbs. standard with all tapped holes, serrated gasket faces.

Hard face seats, V-Port or resilient seats available to suite the specific service.

Custom designed sizes, pressures and configurations available.

Used in these industries:

Pulp & Paper	Mining
Power	Chemical
Industrial	Petroleum

675 Mitchell Ave.
Woodland, WA 98674
Tel: 360-225-8003
800-334-8777
Fax: 360-225-8638
Web: www.a-cvalve.com

A-C Valve Inc.

A-C VALVE, INC.
FABRICATED SLIDE GATE VALVE - FIG 92

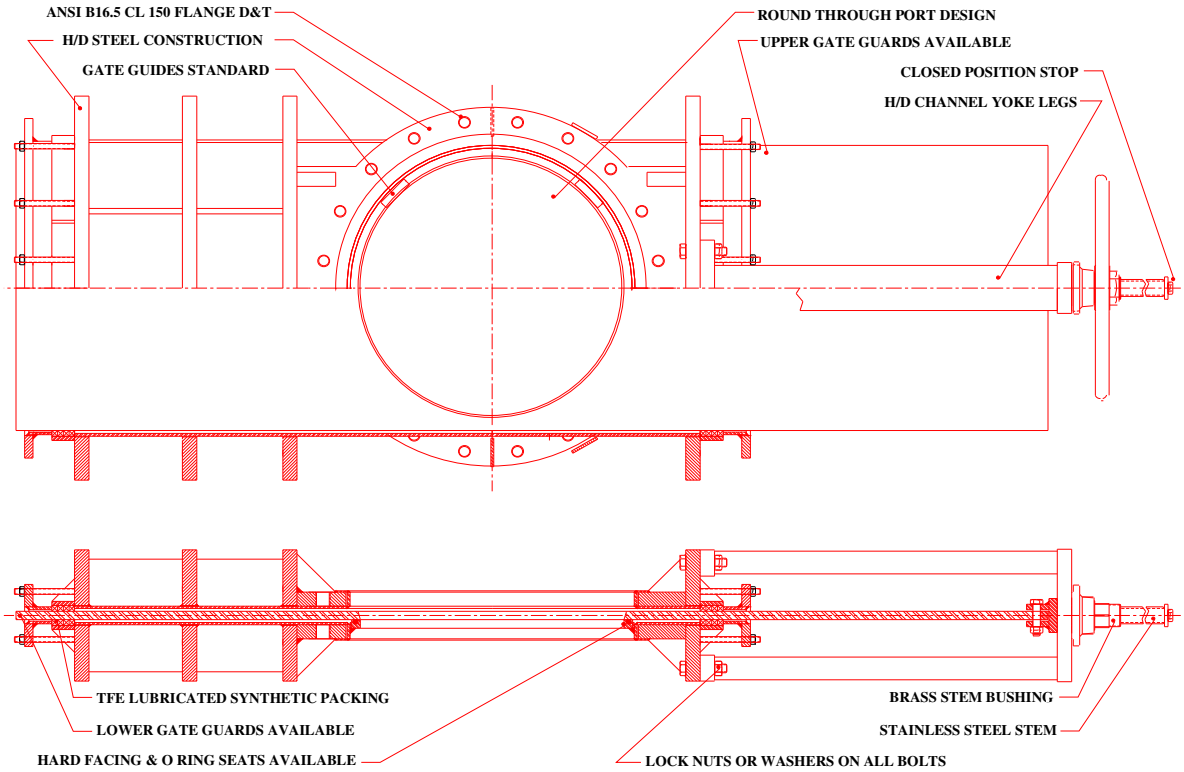

VALVE SHOWN IN OPEN POSITION

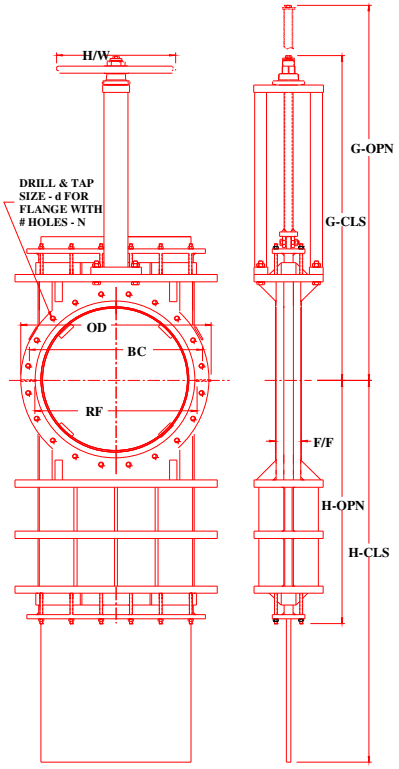

DIMENSIONS AND WEIGHTS:

	VALVE SIZE										
	3”	4”	6”	8”	10”	12”	14”	16”	18”	20”	24”
F/F	2”	2”	2-1/4”	2-3/4”	2-3/4”	3”	3”	3-1/2”	3-1/2”	4-1/2”	4-1/2”
BC	6”	7-1/2”	9-1/2”	11-3/4”	14-1/4”	17”	18-3/4”	21-1/4”	22-3/4”	25”	29-1/2”
RF	5”	6-3/16”	8-1/2”	10-5/8”	12-3/4”	15”	16-1/4”	18-1/2”	21”	23”	27-1/4”
OD	7-1/2”	9”	11”	13-1/2”	16”	19”	21”	23-1/2”	25”	27-1/2”	32”
N/d	4 5/8”-11	8 5/8”-11	8 3/4”-10	8 3/4”-10	12 7/8”-9	12 7/8”-9	12 1”-8	16 1”-8	16 1-1/8”-7	20 1-1/8”-7	20 1-1/4”-7
G-CLS	18-3/4”	20-1/2”	24-3/8”	28-1/2”	32-1/8”	36”	38-3/4”	42-1/2”	45-3/4”	47-1/2”	55-3/4”
G-OPN	22”	24”	31”	36”	43-5/8”	48-3/4”	51-1/2”	58”	63-3/4”	66-1/2”	79-3/8”
H-CLS	11-3/4”	14-1/2”	19-3/8”	24-1/2”	30-1/8”	36”	38-3/4”	44-1/2”	49-3/4”	54-1/4”	65-1/4”
H-OPN	9”	10”	13-1/4”	16-1/2”	19-5/8”	23-3/4”	24-3/4”	28-1/2”	31-3/4”	34”	41-1/2”
H/W	8”	8”	12”	12”	16”	16”	20”	20”	20”	20”	20”
Weight	75	92	122	170	245	340	445	565	640	915	1145

MATERIALS:

	MATERIAL CODE				
	W44	A44	W66	A66	A77
BODY, SEAT and RF	304	304	316	316	317
GATE	304	304	316	316	317
PACKGING GLAND	STEEL	304	STEEL	316	317
FLANGES, EXT. TRIM	STEEL	304	STEEL	304	304
YOKE	STEEL	304	STEEL	304	304
STEM & CLEVIS	304	304	304	304	304
STEM BUSHING	BRASS	BRASS	BRASS	BRASS	BRASS
BOLTING	PLATED	304	PLATED	304	304
PACKING	TFE/SYN.	TFE/SYN.	TFE/SYN.	TFE/SYN.	TFE

A-C VALVE, INC
675 MITCHELL AVE.
WOODLAND, WA 98674

TEL: 360-225-8003 FAX: 360-225-8638
WEB SITE: www.a-cvalve.com