A-C Valve Inc.

FIGURE

L76/L77

DUCTILE IRON BODY
STAINLESS STEEL LINED
KNIFE GATE VALVE
FIG 76-METAL SEAT
FIG 77-RESILIENT SEAT

Offered in our **Figure 76 and 77** styles.

HEAVY DUTY cast ductile iron body, packing gland and yoke.

HEAVY DUTY LUG designed body to resist deflection from line loads and internal line pressure. ANSI B16.5-150 drilled and tapped lugs.

Fabricated **STAINLESS STEEL LINER** and gate (or any weldable alloy).

Valves are designed for 150 PSI CWP rating.

Fig 76 with a **METAL TO METAL SEAT** and **unidirectional** beveled gate which provides shut off as required by MSS-SP-81, capable of handling thick media such as **pulp stock** or **slurries**, as well as **solid media** such as **pellets** or **powders**.

Fig 77's perimeter resilient seat provides **DRIP TIGHT BI-DIRECTIONAL SHUT OFF**.

HEAVY DUTY cast ductile iron **yoke** will not bend or twist under extreme loads.

EASY CONVERSION from handwheel operator to cylinder, bevel gear or electric motor operator using existing yoke.

ENCLOSED BRASS STEM BUSHING provides reduced operating torque and protection of the stem bushing from harsh environments.

Stainless steel stem for corrosion resistance.

TFE lubricated synthetic packing rated for 400。F with a PH range of 3-11.

Designed and tested to MSS SP-81 dimensions and specifications.

Sizes include **14", 16", 18", 20" and 24"**.

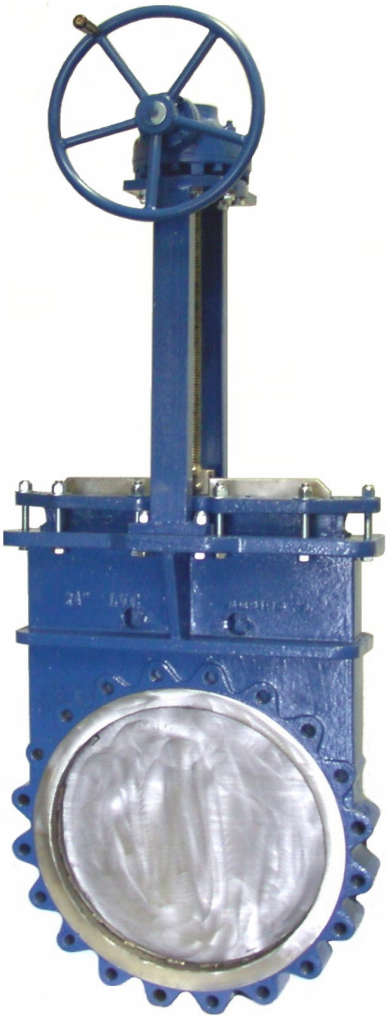

Used in these industries:

Pulp & Paper	**Mining**
Waste Water	**Power**
Chemical	**Industrial**

675 Mitchell Ave.
Woodland, WA 98674
Tel: 360-225-8003
800-334-8777
Fax: 360-225-8638
Web: www.a-cvalve.com

A-C Valve Inc.

A-C Valve Inc.

FIGURE

L76/L77

DUCTILE IRON BODY
STAINLESS STEEL LINED
KNIFE GATE VALVE

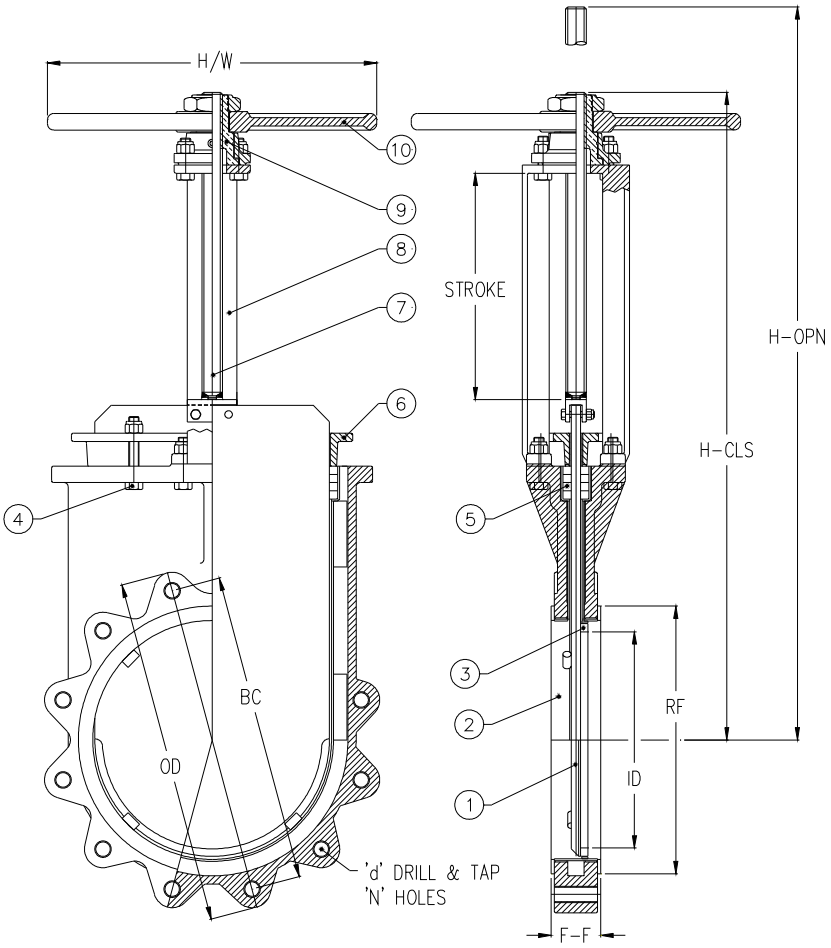

MATERIALS OF CONSTRUCTION

MODEL		76	77
1 GATE		SS	SS
2 LINER	SS	SS	
3 SEAT		SS	
HYCAR**			
4 BOLTS		PLATED	
5 PACKING	TLSP*		
6 GLAND		DI	DI
7 STEM		SS	SS
8 YOKE		DI	DI
9 STEM NUT	BRASS		
10 HANDWHEEL		DI	DI

***TLSP = TFE Lubricated Synthetic Packing.**
****EPDM, Neoprene, Viton and others available.**

SS = Standard with 304 or 316 stainless steel other alloys available.

Normally supplied with handwheel for manual operation, but can be modified for chainwheel, bevel gear, electric motor, hydraulic cylinder or pneumatic cylinder actuators.

DIMENSIONS (INCHES) AND WEIGHTS

SIZE		14"		16"		18"		20"		24"	
		L93	L77	L93	L77	L93	L77	L93	L77	L93	L77
FACE TO FACE	F-F	3"		3-1/2"		3-1/2"		4-1/2"		4-1/2"	
FLANGE OD	OD	21"		23-1/2"		25"		27-1/2"		32"	
BOLT CIRCLE	BC	18-3/4"		21-1/4"		22-3/4"		25"		29-1/2"	
INSIDE DIAMETER	ID	13-1/8"	14-1/4"	14-7/8"	15-7/8"	16-3/8"	17-3/4"	18"	19-3/4"	22"	23-3/4"
NUMBER OF HOLES	N	12		16		16		20		20	
HOLE D&T SIZE	d	1" NC		1" NC		1-1/8" NC		1-1/8" NC		1-1/4" NC	
C/L TO TOP-CLOSED	H	39-1/4"	41-1/4"	43-1/4"	45-3/8"	48"	50"	53-1/8"	55-7/8"	61-5/8"	63-1/2"
C/L TO POP-OPEN	H	52-5/8"	55-1/4"	58-3/4"	61-1/2"	65-1/2"	68"	72-1/8"	75-5/8"	84-3/4"	84-1/2"
HANDWHEEL DIA	H/W	20"		20"		20"		24"		24"	
WEIGHT - LBS.		360		495		565		790		1015	