A-C Valve Inc.

FIGURE

176

BONNETED KNIFE GATE VALVE

Bonneted Knife Gate Valves are ideally suited to aid in reduction of **Fugitive Emissions**.

Cast stainless steel body, gland and yoke. **Fabricated bonnet** which can be designed to the full pressure rating (150 psi) of the valve.

Wiper between body and bonnet to prevent solids from entering bonnet.

Maintenance free Viton stem seal with packing-less O-ring seal gland design or TFE/SYN braded packing.

Gate designed to withstand full 150 PSI rated pressure as required by MSS-SP-81.

Body cavity, seat configuration and beveled gate designed to provide shut-off capability in thick media such as pulp stock, slurries, or with solid media such as pellets or powders.

Easy conversion from handwheel operator to cylinder, bevel gear or electric motor operator using cast yoke.

Enclosed brass stem bushing provides reduced operating torque and protection of the stem bushing from harsh environments.

Stainless steel stem for corrosion resistance.

Designed and tested to MSS-SP-81 dimensions and specifications.

Full port ID.

Used in these industries:

Mining	**Waste Water**
Power	**Chemical**
Petroleum	**Pulp & Paper**

675 Mitchell Ave.
Woodland, WA 98674
Tel: 360-225-8003
800-334-8777
Fax: 360-225-8638
Web: www.a-cvalve.com

A-C Valve Inc.

FIGURE

176

A-C Valve Inc.

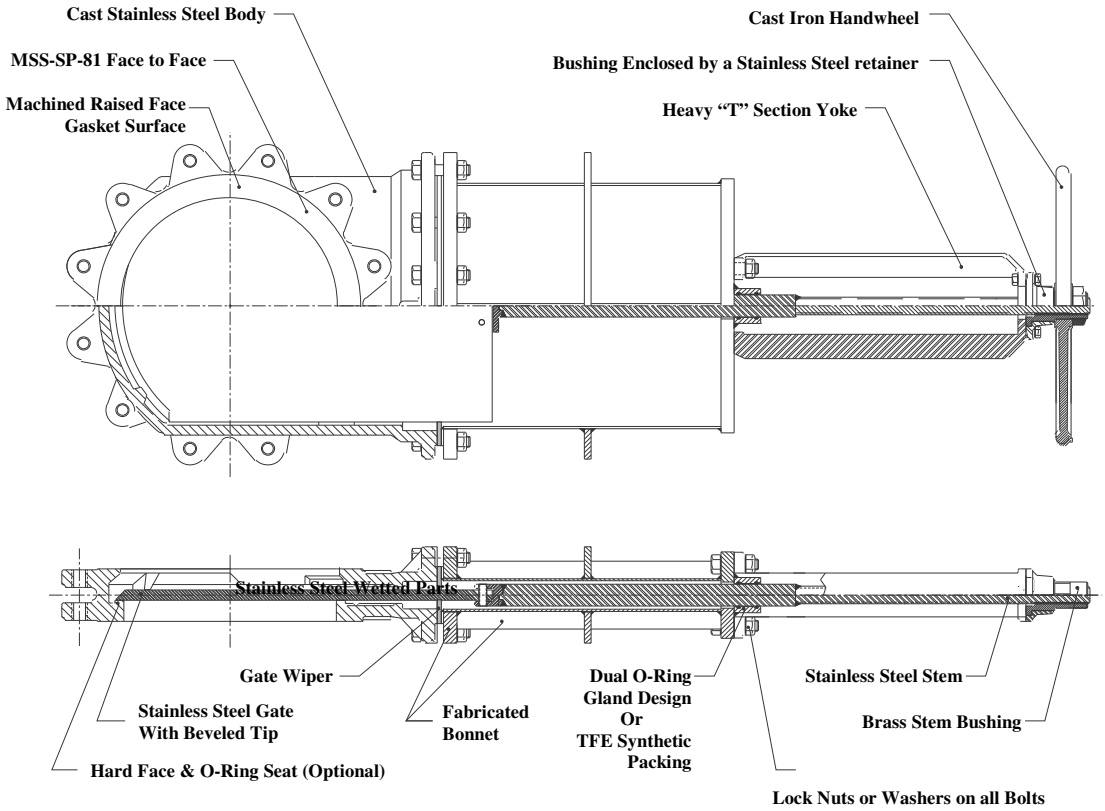

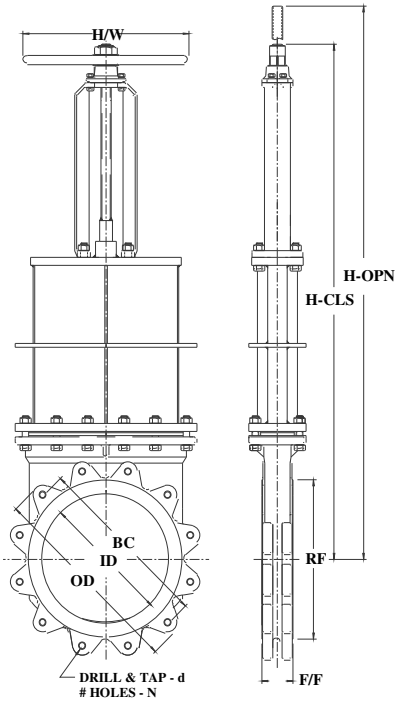

DIMENSIONS:

	VALVE SIZE										
	3"	4"	6"	8"	10"	12"	14"	16"	18"	20"	24"
ID	3"	4"	6"	8"	10"	12"	13-1/4"	15-1/4"	17-1/4"	19"	23"
F/F	2"	2"	2-1/4"	2-3/4"	2-3/4"	3"	3"	3-1/2"	3-1/2"	4-1/2"	4-1/2"
BC	6"	7-1/2"	9-1/2"	11-3/4"	14-1/4"	17"	18-3/4"	21-1/4"	22-3/4"	25"	29-1/2"
RF	5"	5-3/16"	8-1/2"	10-5/8"	12-3/4"	15"	16-1/4"	18-1/2"	21"	23"	27-1/4"
OD	7-1/2"	9"	11"	13-1/2"	16"	19"	21"	23-1/2"	25"	27-1/2"	32"
N	4	8	8	8	12	12	12	16	16	20	20
d	5/8"-11	5/8"-11	3/4"-10	3/4"-10	7/8"-9	7/8"-9	1"-8	1"-8	1-1/8"-7	1-1/8"-7	1-1/4"-7
H/W	8"	8"	12"	12"	16"	16"	20"	20"	20"	20"	20"
H-CLS	21-3/4"	24-1/2"	30-1/4"	36-1/2"	41-1/4"	48-3/4"	58"	64"	70-1/4"	74-1/2"	88-1/2"
H-OPN	25"	29"	38"	46"	51-3/4"	61-1/2"	72-1/4"	80-1/2"	88-1/4"	94-1/4"	112-1/4"
WEIGHT	64	75	109	160	251	295	335	470	740	990	1400

MATERIALS:

	MATERIAL CODE				
	W44	A44	W66	A66	A77
BODY, GATE & SEAT	304	304	316	316	317
BONNET LINER	304	304	316	316	317
BONNET FLG & STIFF	STEEL	304	STEEL	316	317
GLAND	304	304	316	316	317
YOKE & RETAINER	304	304	304	304	304
STEM & CLEVIS	304	304	316	316	316
STEM BUSHING	BRASS	BRASS	BRASS	BRASS	BRASS
BOLTING	PLATED	304	PLATED	304	304
PACKING	TFE/SYN	TFE/SYN	TFE/SYN	TFE/SYN	TFE

A-C Valve Inc.
675 Mitchell Ave.
Woodland, WA 98674
Tel: 360-225-8003
Fax: 360-225-8638