A-C Valve Inc.

FIGURE

76/77

FABRICATED LARGE DIAMETER KNIFE GATE VALVE

- Offered in our Figure **76** and **77**
- **HEAVY DUTY** cast ductile iron body, packing gland and yoke.
- **HEAVY DUTY** lug designed body to resist deflection from line loads and line internal pressure
- Fabricated **stainless steel (or any weldable alloy) liner**
- **Stainless steel gate** (available in other exotic alloys)
- Stainless steel metal to metal seat **Fig 76**
- **Bi-directional** resilient seat **Fig 77**
- **Heavy duty** designed body to resist deflection from line loads and internal pressure.
- Valves are designed for **50 PSI or 125 PSI CWP** pressure rating
- Other pressure ratings available
- Fig 76's seat configuration and beveled gate designed to provide **shutoff** capability in thick media such as pulp stock, slurries, or with solid media such as pellets or powders
- **Heavy** fabricated **steel yoke** will not bend or twist under extreme loads.
- **Easy conversion** from handwheel operator to cylinder, bevel gear or electric motor operator using existing yoke.
- **Enclosed brass stem bushing** provides reduced operating torque and protection of the stem bushing from harsh environments.
- O-Ring resilient seat available.
- **Precision machined** stainless steel gate for superior seating capability.
- **Stainless steel stem** for corrosion resistance.
- Sizes include 30", 36", 42",48", 54", 60" or **larger**
- Bonneted versions are available

Used in these industries:

Pulp & Paper	**Mining**
Waste Water	**Power**
Chemical	**Industrial**

675 Mitchell Ave.
Woodland, WA 98674
Tel: 360-225-8003
800-334-8777
Fax: 360-225-8638
Web: www.a-cvalve.com

A-C Valve Inc.

A-C VALVE INC.
FABRICATED STEEL KNIFE GATE VALVE—FIG F76 & F77

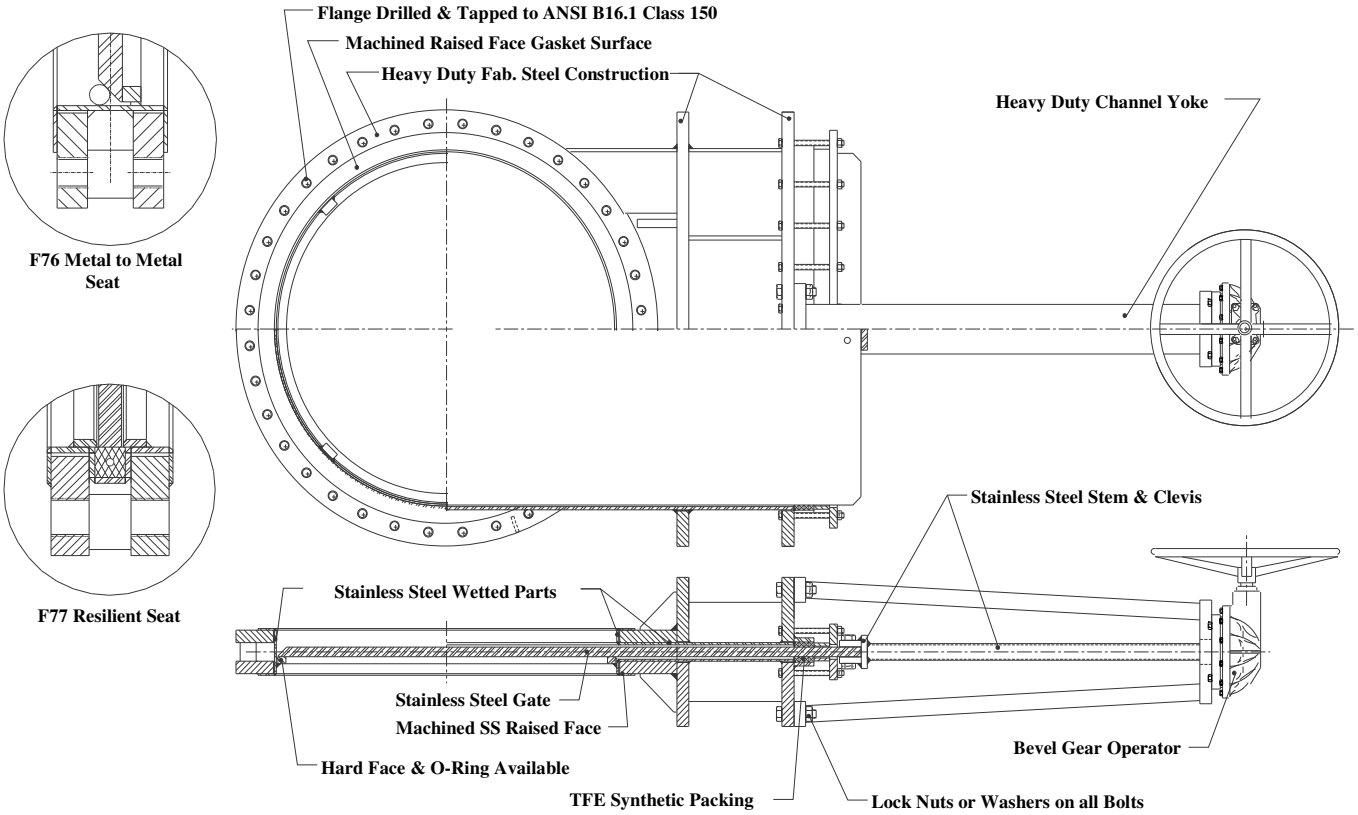

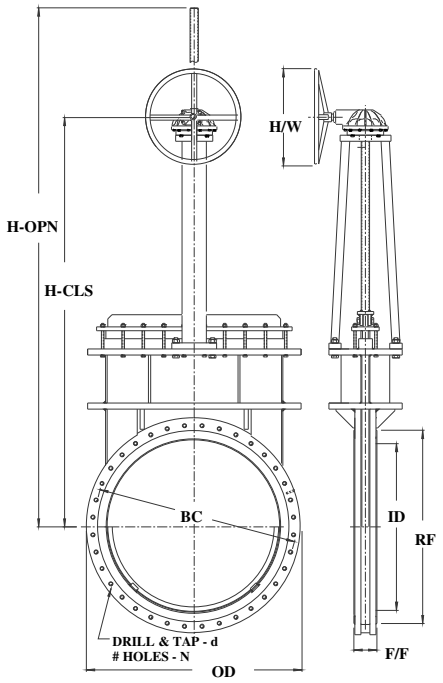

DIMENSIONS:

	VALVE SIZE									
	30”	30”	36”	36”	42”	42”	48”	48”	54”	60”
ID	28”	28”	33-3/4”	33-3/4”	40-1/2”	40-1/2”	46-1/2”	46-1/2”	52-1/2”	28-1/2”
F/F	4”	4-5/8”	5”	5-3/4”	5-5/8”	6-1/4”	6-1/8”	7”	6-5/8”	7”
BC	36”	36”	42-3/4”	42-3/4”	49-1/2”	49-1/2”	56”	56”	62-3/4”	69-1/4”
RF	33-3/4”	33-3/4”	40-1/4”	40-1/4”	47”	47”	53-1/2”	53-1/2”	59-1/2”	66”
OD	38-3/4”	38-3/4”	46”	46”	53”	53”	59-1/2”	59-1/2”	66-1/4”	73”
N	28	28	32	32	36	36	44	44	44	52
d	1-1/4”-7	1-1/4”-7	1-1/2”-6	1-1/2”-6	1-1/2”-6	1-1/2”-6	1-1/2”-6	1-1/2”-6	1-3/4”-5	1-3/4”-5
H/W	24”	24”	24”	24”	36”	36”	36”	36”	36”	36”
H-CLS	74-3/4”	74-3/4”	89-1/8”	89-1/8”	97-1/4”	97-1/4”	110”	110”	123”	135”
H-OPN	104”	104”	121”	121”	136”	136”	155”	155”	173”	189”
PRESSURE RATING	50 PSI	125 PSI	50 PSI	125 PSI	50 PSI	125 PSI	50 PSI	125 PSI	50 PSI	50 PSI

MATERIALS:

	MATERIAL CODE				
	W44	A44	W66	A66	A77
BODY, SEAT* & RF	304	304	316	316	317
GATE	304	304	316	316	317
PACKING GLAND	STEEL	304	STEEL	316	317
FLANGES, EXT TRIM	STEEL	304	STEEL	316	317
YOKE	STEEL	304	STEEL	316	317
STEM & CLEVIS	304	304	304	304	304
STEM BUSHING	BRASS	BRASS	BRASS	BRASS	BRASS
BOLTING	PLATED	304	PLATED	304	304
PACKING	TFE/SYN	TFE/SYN	TFE/SYN	TFE/SYN	TFE

*STANDARD SEAT MATERIAL FOR F77 IS HYCAR. EPDM, NEOPRENE, AND VITON AVAILABLE

A-C VALVE, INC.
675 Mitchell Ave.
Woodland, WA 98674
Tel: 360-225-8003 **Fax: 360-225-8638**
800-334-8777