A-C Valve Inc.

FIGURE

60

DUCTILE IRON BODY
KNIFE GATE VALVE

HEAVY DUTY cast ductile iron body and yoke for the most rugged service.

Through bolting on side flange bolts to allow easy installation.

Replaceable natural rubber seat provides a **BI-DIRECTIONAL BUBBLE TIGHT SEAL** across gate from 0 to 150 PSI.

SEAT IS FLUSH with the bottom of the port **ELIMINATING** any pockets in the bottom of the Valve to collect material in media such as slurries, pellets or powders.

Rubber seat has a **MOLDED-IN STEEL REINFOREMENT** and is bolted in place to prevent if from being shifted out of position by gate movement.

Rubber seat replacement is quick and easy.

Machined **STAINLESS STEEL GATE** and Stem for corrosion resistance and durability.

EASY CONVERSION from handwheel operator to cylinder, bevel gear or electric motor operator using cast yoke.

ENCLOSED BRASS STEM BUSHING provides reduced operating torque and protection of the stem bushing from harsh environments.

FULL PACKING SEAL around gate to minimize packing leakage.

MSS-SP-81 face to face dimension and flange dimensions.

FULL PORT ID.

Minimum 4 BOLT PACKING GLAND to assure proper gland alignment in all sizes.

Entire valve (**inside and outside**) coated with an **Epoxy Powder Coating** for corrosion resistance.

Used in these industries:

Mining	**Waste Water**
Power	**Food Processing**
Chemical	**Pulp & Paper**

675 Mitchell Ave.
Woodland, WA 98674
Tel: 360-225-8003
800-334-8777
Fax: 360-225-8638
Web: www.a-cvalve.com

A-C Valve Inc.

A-C Valve Inc.

FIGURE

60

DUCTILE IRON BODY KNIFE GATE VALVE

MATERIALS OF CONSTRUCTION

MODEL	**60**
1 GATE	SS
2 BODY	DI
3 SEAT	NATURAL RUBBER*
4 BOLTS	PLATED
5 PACKING	TLSP**
6 GLAND	DI
7 STEM	SS
8 YOKE	DI
9 STEM NUT	BRASS
10 HANDWHEEL	DI

* Buna and EPDM also available

** TLSP = TFE Lubricated Synthetic Packing

Normally supplied with handwheel for manual operation, but can be modified for lever, chainwheel, bevel gear, electric, hydraulic cylinder or pneumatic cylinder operator.

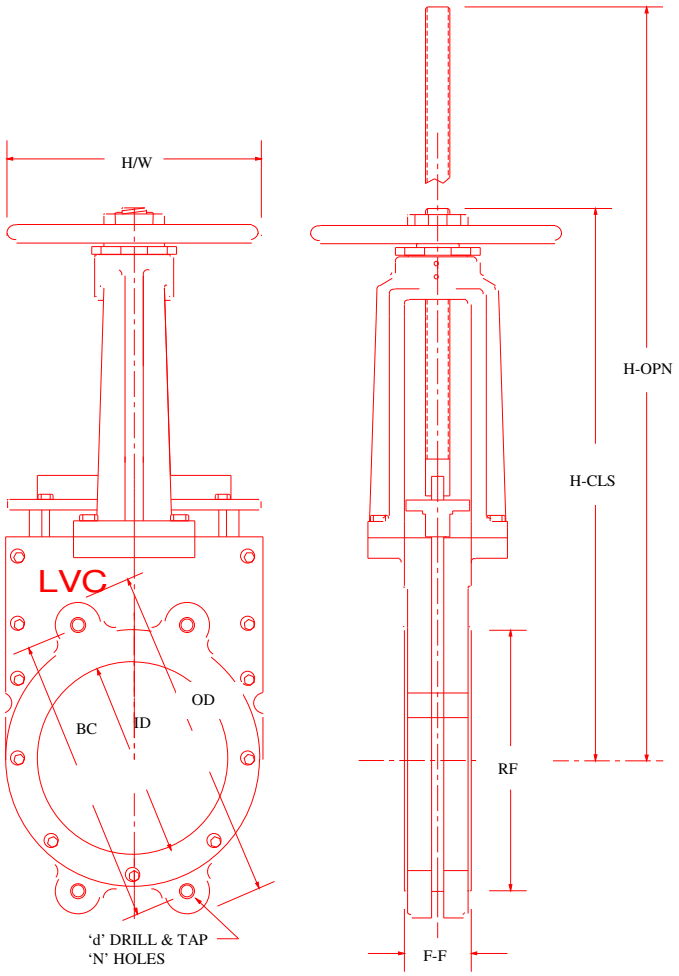

DIMENSIONS (INCHES) AND WEIGHTS

SIZE		3"	4"	6"	8"	10"	12"	14"	16"	18"	20"	24"
FACE TO FACE	F-F	2"	2"	2-1/4"	2-3/4"	2-3/4"	3"	3"	3-1/2"	3/1/2"	3-1/2"	4"
FLANGE OD	OD	7-1/2"	9"	11"	13-1/2"	16"	19"	21"	23-1/2"	25"	27-1/2"	32"
BOLT CIRCLE	BC	6"	7-1/2"	9-1/2"	11-3/4"	14-1/4"	17"	18-3/4"	21-1/4"	22-3/4"	25"	29-1/2"
FLANGE RF	RF	5"	6-3/16"	8-1/2"	10-5/8"	12-3/4"	15"	16-1/4"	18-1/2"	-FLAT	FACE FL	ANGE-
INSIDE DIAMETER	ID	3"	4"	6"	8"	10"	12"	14"	15-1/4"	17-1/4"	19-1/4"	23-1/4"
NUMBER OF HOLES	N	4	8	8	8	12	12	12	16	16	20	20
HOLE D&T SIZE	d	5/8"-11	5/8"-11	3/4"-10	3/4"-10	7/8"-9	7/8"-9	1"-8	1"-8	1-1/8"-7	1-1/8"-7	1-1/4"-7
C/L TO TOP-CLOSED	H-CLS	14-1/4"	16-1/4"	20-1/8"	24-1/4"	28-1/2"	34-1/2"	40"	41"	47-3/8"	51"	50-1/2"
C/L TO TOP-OPEN	H-OPN	17-1/2"	20-1/2"	26-1/2"	32-1/2"	38-3/4"	47"	54-1/4"	56-1/4"	64"	72-1/4"	82-1/4"
HANDWHEEL DIA.	H/W	8"	12"	12"	16"	16"	16"	24"	24"	24"	24"	24"
WEIGHT - LBS.		29	46	75	118	180	295	345	455	545	800	1050