A-C Valve Inc.

FIGURE

65

DUCTILE IRON BODY
URETHANE LINED
KNIFE GATE VALVE

HEAVY DUTY cast ductile iron body and yoke for the most rugged service.

HEAVY DUTY Lug body design.

URETHANE LINER and seat provides a **BI-DIRECTIONAL BUBBLE TIGHT SEAL** across gate from 0 to 150 PSI.

SEAT IS FLUSH with the bottom of the port **ELIMINATING** any pockets in the bottom of the Valve to collect material in media such as slurries, pellets or powders.

URETHANE LINER is a one piece molded in place full body liner with integral seat.

Urethane liner can be replaced by the manufacturer.

STAINLESS STEEL GATE and STEM for corrosion resistance and durability.

EASY CONVERSION from handwheel operator to cylinder, bevel gear or electric motor operator using cast yoke.

ENCLOSED BRASS STEM BUSHING provides reduced operating torque and protection of the stem bushing from harsh environments.

FULL PACKING SEAL around gate to minimize packing leakage.

MSS-SP-81 face to face dimension and flange dimensions.

FULL PORT ID.

Minimum 4 BOLT PACKING GLAND to assure proper gland alignment in all sizes.

Time proven TOWNIPRENE urethane liner for the best abrasion resistance in tough applications.

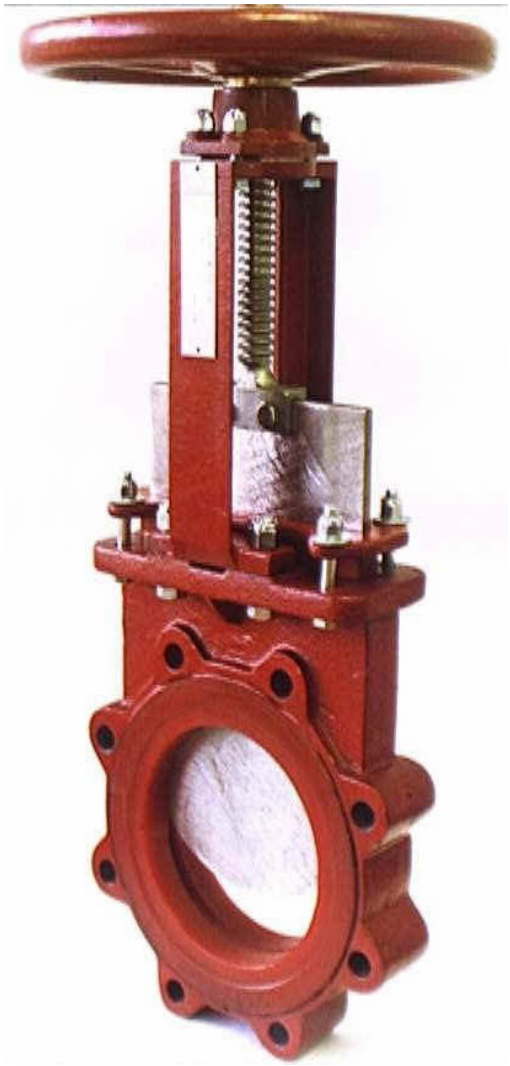

Used in these industries:

Mining	**Waste Water**
Power	**Chemical**

675 Mitchell Ave.
Woodland, WA 98674
Tel: 360-225-8003
800-334-8777
Fax: 360-225-8638
Web: www.a-cvalve.com

A-C Valve Inc.

A-C Valve Inc.

FIGURE

65

DUCTILE IRON BODY URETHANE LINED KNIFE GATE VALVE

MATERIALS OF CONSTRUCTION	
MODEL	**65**
1 GATE	SS
2 BODY	DI
3 SEAT	TOWNIPRENE
4 BOLTS	PLATED
5 PACKING	TLSP*
6 GLAND	DI
7 STEM	SS
8 YOKE	DI

*TLSP = TFE Lubricated Synthetic Packing

Normally supplied with handwheel for manual operation, but can be modified for lever, chainwheel, bevel gear, electric, hydraulic cylinder or pneumatic cylinder operator.

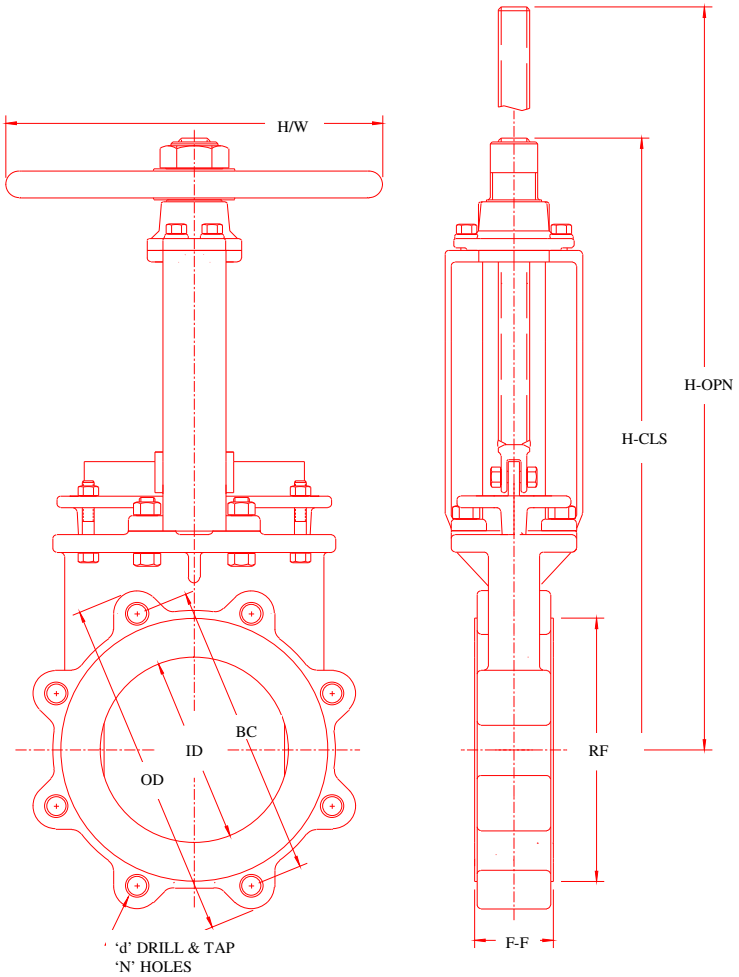

DIMENSIONS (INCHES) AND WEIGHTS

SIZE			3"	4"	6"	8"	10"	12"	14"		16"	18"
FACE TO FACE	F-F	2"	2"	2-1/4"	2-3/4"	2-3/4"	3"	3"	3-1/2"	3/1/2"	4-1/2"	4-1/2"
FLANGE OD	OD	7-1/2"	9"	11"	13-1/2"	16"	19"	21"	23-1/2"	25"	27-1/2"	32"
BOLT CIRCLE	BC	6"	7-1/2"	9-1/2"	11-3/4"	14-1/4"	17"	18-3/4"	21-1/4"	22-3/4"	25"	29-1/2"
INSIDE DIAMETER	ID	3"	4"	6"	8"	10"	12"	13-1/4"	15-1/4"	17-1/4"	19-1/4"	23-1/4"
NUMBER OF HOLES	N	4	8	8	8	12	12	12	16	16	20	20
HOLE D&T SIZE	d	5/8"-11	5/8"-11	3/4"-10	3/4"-10	7/8"-9	7/8"-9	1"-8	1"-8	1-1/8"-7	1-1/8"-7	1-1/4"-7
C/L TO TOP-CLOSED	H-CLS	14-1/4"	16-1/4"	20-1/8"	24-1/4"	28-1/2"	34-1/2"	40"	41"	47"	51-3/4"	58-3/4"
C/L TO TOP-OPEN	H-OPN	17-1/2"	20-1/2"	26-1/2"	32-1/2"	38-3/4"	47"	54-1/4"	56-1/4"	64"	72-1/4"	82-1/4"
HANDWHEEL DIA.	H/W	8"	12"	12"	16"	16"	16"	24"	24"	24"	24"	24"
WEIGHT - LBS.		29	38	52	85	120	160	212	300	350	480	600